PRINCIPAL PARTICULARS

LENGTH	(O.A)	69.80 m
BREADTH	(MLD)	17.60 m
DEPTH	(MLD)	7.20 m
DRAFT	(DESIGNED)	5.90 m
DRAFT	(SCANTLING)	6.10 m

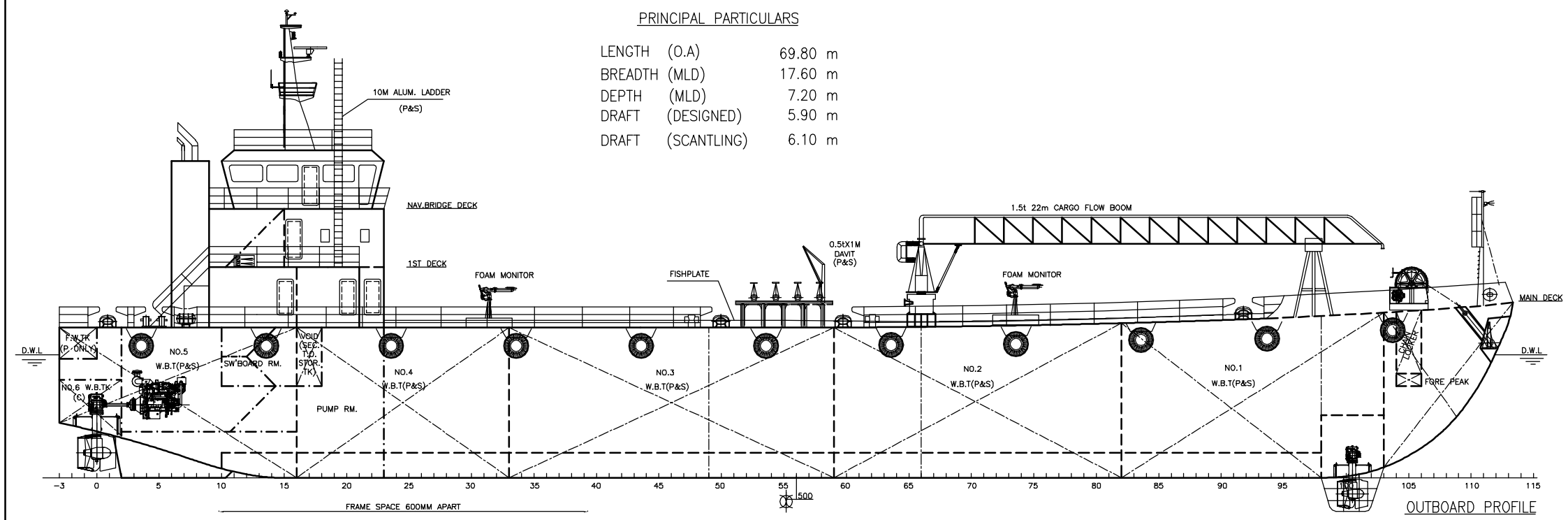

OUTBOARD PROFILE

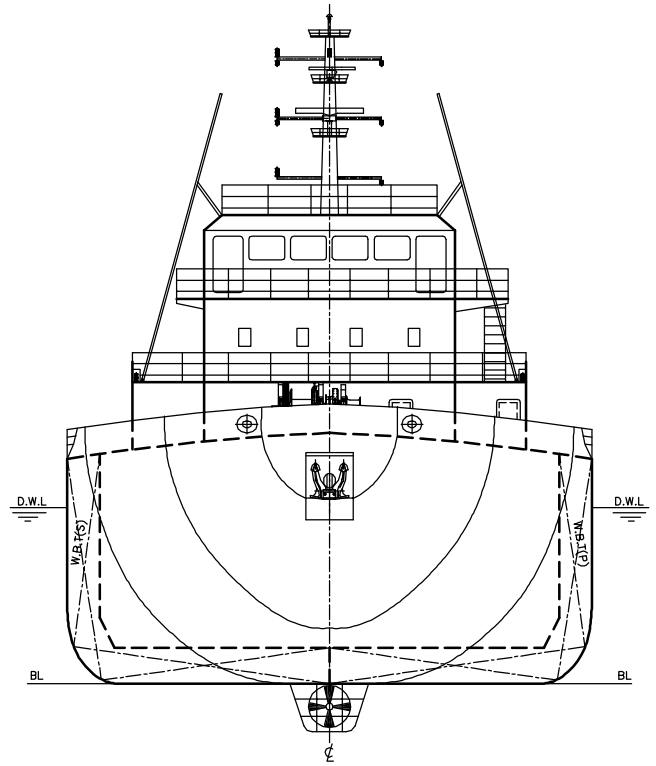

FRONT VIEW

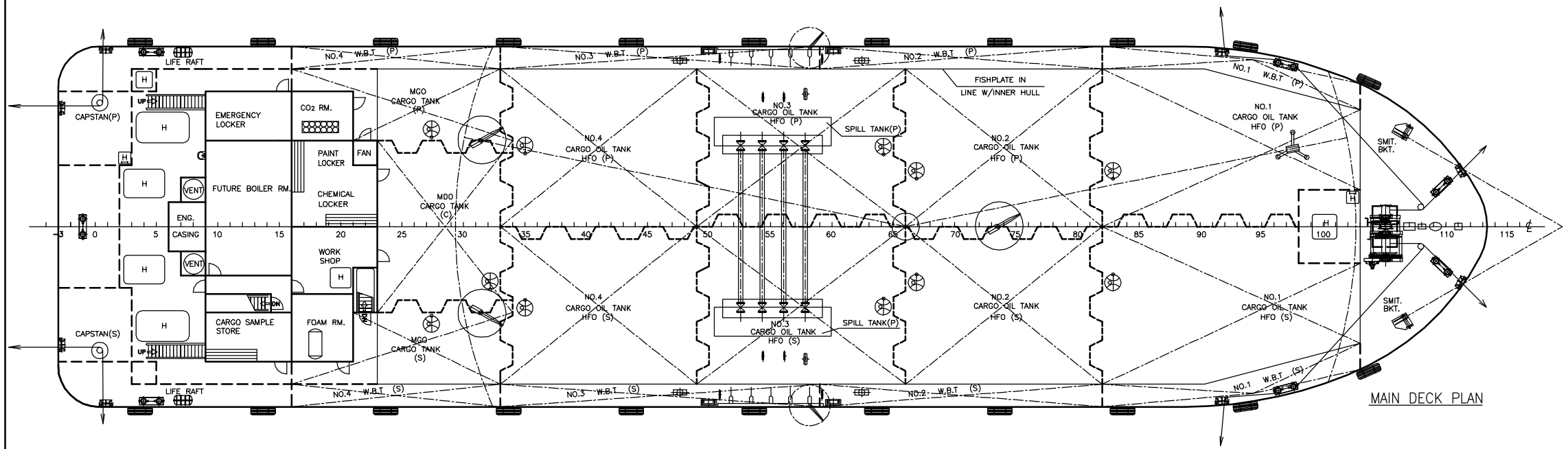

MAIN DECK PLAN

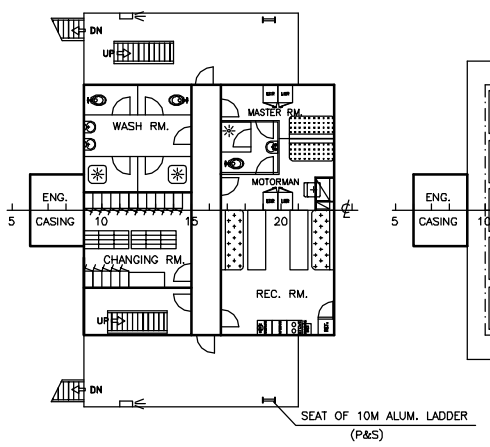

1ST DECK

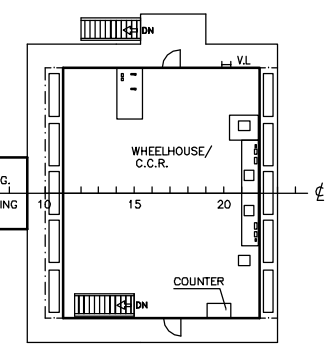

NAV.BRIDGE DECK

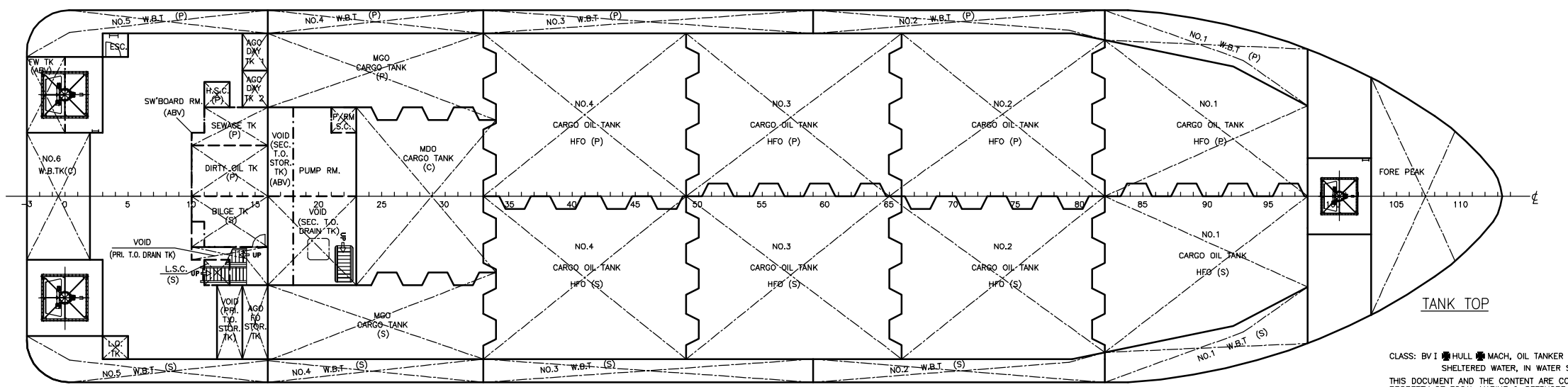

TANK TOP

CLASS: BV I ✱ HULL ✱ MACH, OIL TANKER FLASH POINT > 60 °C SHELTERED WATER, IN WATER SURVEY.

THIS DOCUMENT AND THE CONTENT ARE COPYRIGHT AND REMAIN PROPERTY OF FOCAL MARINE & OFFSHORE CORP LTD. THEY MUST NOT BE COPIED IN WHOLE OR IN PART TO ANY THIRD PARTY FOR ANY PURPOSE WITHOUT PRIOR WRITTEN PERMISSION FROM FOCAL MARINE & OFFSHORE CORP LTD. THE RECEIPT OF THIS DOCUMENT IMPLIES ACCEPTANCE OF THIS CONDITION.

REV NO.	REVISION DESCRIPTION	BY	DATE
5	AMENDED AS PER OWNER COMMENTS	ZF	JUN-15-2006
4	AMENDED AS PER OWNER COMMENTS	ZF	JUN-12-2006
3	AMENDED AS PER OWNER COMMENTS	ZF	JUN-10-2006
2	AMENDED AS PER DESIGN PROGRESS	ZF	JUN-06-2006
1	AMENDED AS PER DESIGN PROGRESS	CY	APR-30-2006
0	AMENDED AS PER DESIGN PROGRESS	ZF	NOV-02-2005

OWNER

UNICORN SHIPPING INTERNATIONAL LIMITED

BUILDER

JIANGMEN YINXING SHIPBUILDING CO., LTD

PROJECT

4,250 DWT BUNKERING VESSEL

APPROVE		DWG TITLE: GENERAL ARRANGEMENT	JOB NO.: P-1041
CHECKER			DWG NO.: P-1041-G01
DRAWER	ZF		SCALE : 1:250 (A3)
DATE DRAWN	JUL-13-2005		CLASS : BV

FOCAL MARINE & OFFSHORE CORP LTD
TEL: 86-21-58705786 FAX: 86-21-58731272 EMAIL: info@focalmarine.com